08

SUPPLY AND RETURN LINEAR SLOT DIFFUSER

company profile 2022

LINEAR BAR GRILL

PERFORMANCE
for Metal Production
مصنع واحة الإنجاز للصناعات المعدنية

@Performance

القطيف – صناعية الأوجام – طريق الظهران الجبيل السريع – ص.ب ١٠٨٤٨ – القطيف ٣١٩١١
QATIF - AUJAM INDUSTRIAL AREA DHAHRAN - JUBAIL HI WAY P.O. BOX 10848 - QATIF 31911

LINEAR BAR GRILL

@Performance

QATIF - AUJAM INDUSTRIAL
AREA DHAHRAN - JUBAIL HI WAY
P.O. BOX 10848 - QATIF 31911

القطيف - صناعية الأوجام - طريق الظهران الجبيل السريع - ص.ب ١٠٨٤٨ - القطيف ٣١٩١١

LINEAR BAR GRILL







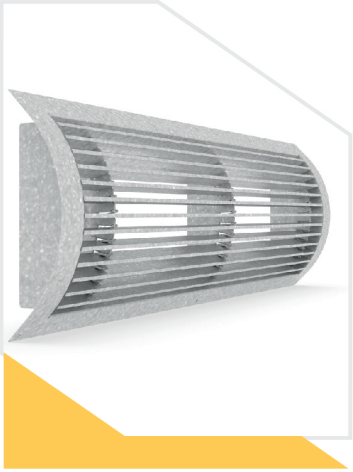
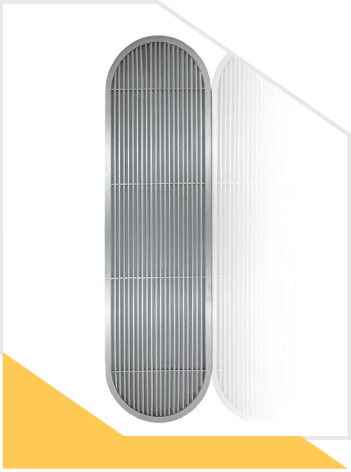
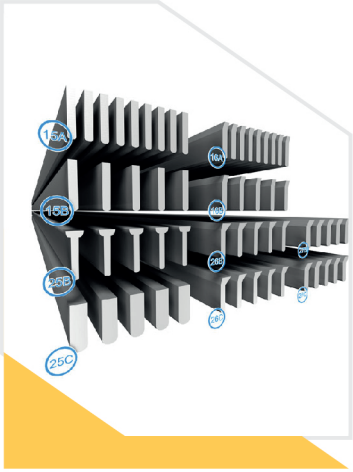

SUPPLY LINEAR BAR REGISTER: MODEL (SLBR)

SUPPLY LINEAR BAR GRILLE: MODEL (SLBG)

RETURN LINEAR BAR REGISTER: MODEL (RLBR)

RETURN LINEAR BAR GRILLE: MODEL (RLBG)

linear bar grill

LINEAR BAR GRILLE

General

Linear bar grille is specially designed for various throw level and variety of standard and fixed Deflections of air flow. Linear bar grilles are mainly used in the side walls of the air-conditioned buildings to ensure the uniform airflow with minimized noise level. Linear bar registers supplied with opposed blade dampers with adjustable rear blades.

Construction

- Extruded aluminum profile frame with 30mm flange width and 45mm height
- 4mm, 5mm & 6mm face width and 18mm height aluminum extruded blades
- Extruded aluminum profile with 18mm height and aero foil shaped.
- Blade pitch 12mm as standard and other pitches on request.
- 0°, 15° single way & double way & 35° single way deflection front blades.
- 50mm to 350mm width (or height) with 50mm increments as standard.
- Any length from 200mm to 6 Mt.

Description

- High standard aluminum extruded profile frame and blades rigidly resistance. fixed with corrosion resistance
- 30mm flange width and 45mm depth frames with rear aero foil blades mounted with nylon bushes and the front face blades of required deflections as a single core riveted as 'supply option'
- 30mm flange width and 27mm depth frames without rear blades and the front face blades of required deflections as a single core riveted as 'return option'
- Opposed blade dampers are fixed to the frames by special clips in case of registers with front side screw operated blades.
- Lengths of more than 3 Mt. linear grilles will be supplied with joining strips to install them with Uninterrupted run and to give better appearance.
- All Linear bar grilles with supply option will be supplied with a foam gasket fixed to the inner flange to avoid air leakage.

- Linear bar grilles will be supplied either with concealed clips or C shaped clamps for fixing

Standard Finishes

- Natural aluminum finish.
- Powder coated color finish, other colors as option.
- Flexibility of finish is available as option.

linear bar grill

Specifications | Linear Bar Grilles

Supply Linear Bar Grille

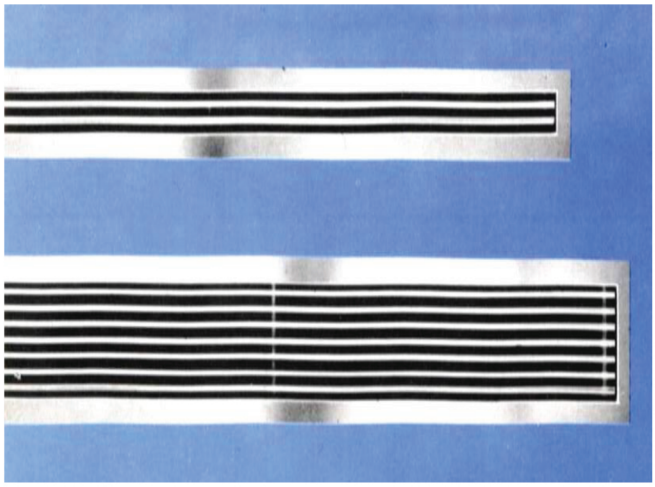

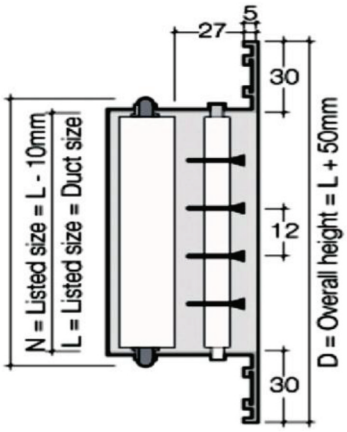

· Horizontal front face blades with deflection options of 0° or 15° single way and double way.
· Vertical rear blades with nylon bush mounting and individually operated.

Return Linear Bar Grille

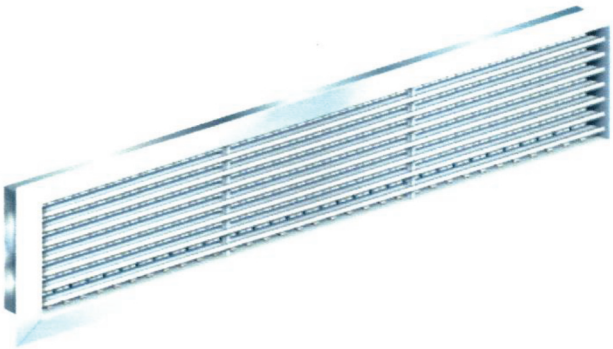

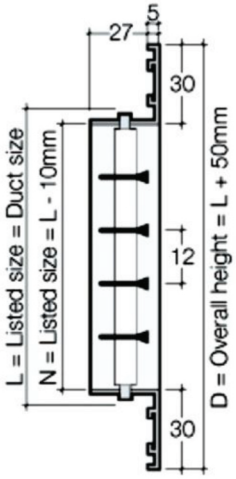

· Horizontal front face blades with deflection options of 0° or 15° single way & double

linear bar grill

Specifications | Linear Bar Registers

Supply Linear Bar Registers

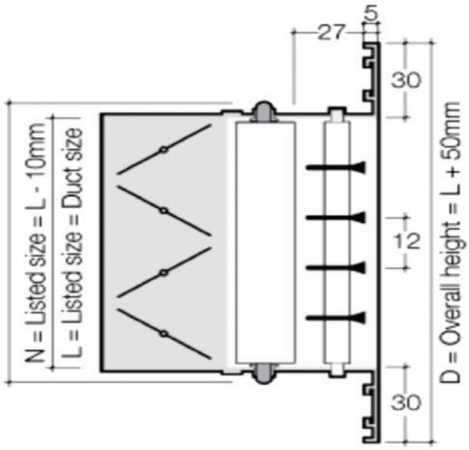

· Horizontal front face blades with deflection options of 0° or 15° single way & double way.

· Vertical rear blades with nylon bush mounting and individually operated.

· Screw operated opposed blade dampers.

Return Linear Bar Registers

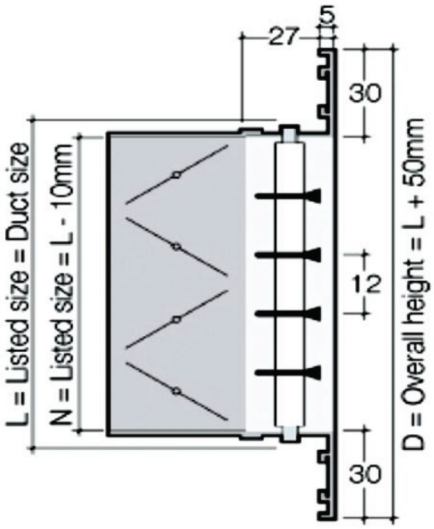

· Horizontal front face blades with deflection options of 0° or 15° single way & double way. · Screw operated opposed blade dampers

linear bar grill

Specifications | Special Grille

Curved Linear Bar Registers

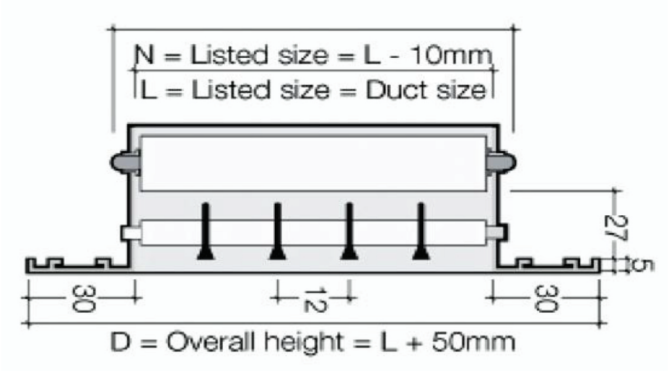

· Horizontal front face blades with deflection options of 0° or 15° single way & double way

· Vertical rear blades with nylon bush mounting and individually operated.

· Screw operated opposed blade dampers for larger radius curvatures.

· Both convex and concave type curvatures.

· Minimum of 1000mm radius curvature and up to3000mm long as single piece. Larger lengths can be supplied joint pieces

Width in mm	50	75	100	125	150	200	250	300
Length in mm	200 to 6000 as a single piece or any length with joints							

Note: Any non standard sizes can be supplied upon request

linear bar grill

FOR SPECIAL APPLICATIONS OF ALL LINEAR GRILLES, REGISTERS AND DIFFUSERS—CONTACT FACTORY

MITERED CORNERS

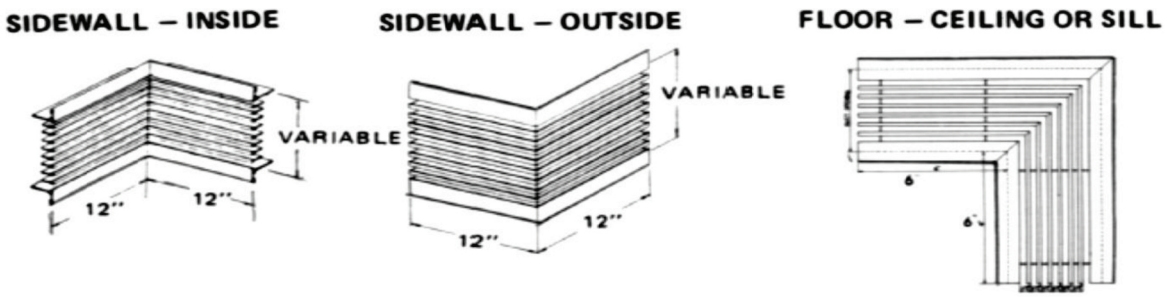

Standard 90° horizontal mitered corners available for floor, sill and ceiling applications in 0° , 15° one way throw and 15° one way throw without damper

Special horizontal mitered corners selection available for floor, sill and ceiling applications includes a angle greater than 90° and less than 180° available in 0° , 15° one way throw and 15° two way throw without damper.

Vertical outside mitered corners are available for wall application at the junction of two outside walls with a standard angle of 90. Available in 0° , 15° one way throw and 15° two way throw without damper.

Vertical inside mitered corners are available for wall application at the junction of two inside walls with a standard angle of 90° . Available in 0° , 15° one way throw and 15° two way throw without damper.

linear bar grill

LINEAR BAR GRILLES

PERFORMANCE DATA

0° Deflection/12mm blade spacing /supply

Width (mm) Ak in m²	Face Velocity	2.0	2.5	3.0	3.5	4.0	4.5	5.0
50	M³/Sec.	0.08	0.1	0.12	0.14	0.16	0.19	0.2
	CFM	169	213	255	297	339	381	423
	PS in mm H_2O	0.14	0.20	0.20	0.23	0.29	0.37	0.45
0.039	Throw (Mt.)	2.7-4.1-5.6	3.5-4.4-6.2	4.1-5.1-7.1	4.5-5.5-79	4.9-5.8-8.2	5.4-6.4-9.4	5.4-6.8-9.7
	NC	<15	<15	<15	17	22	25	31
100	M³/Sec.	275	346	413	483	550	620	689
	CFM	0.13	0.164	0.196	0.228	0.26	0.293	0.326
	PS in mm H_2O	0.15	0.20	0.20	0.28	0.36	0.46	0.56
0.059	Throw (Mt.)	3.5-4.6-7.1	4.1-5.3-7.8	4.8-5.9-8.5	5.3-6.3-9.2	5.8-7.2-10.1	6.4-8.1-11.4	6.9-8.6-12.5
	NC	<15	<15	15	18	23	27	32
150	M³/Sec.	373	466	559	653	745	838	932
	CFM	0.177	0.22	0.264	0.309	0.352	0.397	0.44
	PS in mm H_2O	0.15	0.19	0.23	0.33	0.42	0.54	0.65
0.078	Throw (Mt.)	4.2-5.7-8.3	4.7-6.2-9.1	5.5-7-10.2	6.2-7.7-10.9	6.9-8.7-11.6	7.4-9.3-13.1	7.8-9.8-14.0
	NC	<15	<15	16	18	24	29	34
200	M³/Sec.	470	589	706	824	940	1059	1175
	CFM	0.222	0.278	0.334	0.389	0.443	0.499	0.556
	PS in mm H_2O	0.16	0.20	0.29	0.36	0.49	0.6	0.84
0.097	Throw (Mt.)	4.6-6.2-9.0	5.3-6.9-10.1	6.4-7.8-11.3	7.1-8.5-12.3	7.9-9.5-13.1	8.4.10.4-14.5	9.0-11.0-15.9
	NC	<15	16	17	21	26	32	36
250	M³/Sec.	567	709	851	994	1135	1277	1420
	CFM	0.269	0.336	0.403	0.470	0.536	0.604	0.68
	PS in mm H_2O	0.19	0.23	0.32	0.40	0.53	0.71	0.87
0.116	Throw (Mt.)	5.1-6.8-10	5.6-7.8-11	6.7-8.5-12.1	7.6-9.4-13.4	8.6-10.3-14.4	9.0-11.-15.9	9.6-11.9-17.5
	NC	<15	16	21	27	31	35	40
300	M³/Sec.	686	857	1029	1200	1372	1543	1715
	CFM	0.324	0.405	0.487	0.567	0.648	0.729	0.81
	PS in mm H_2O	0.19	0.28	0.33	0.44	0.59	0.78	0.94
0.136	Throw (Mt.)	5.3-7.5-10.8	6.2-8.4-11.8	7.2-9.4-13.0	8.4-10.5-14.4	9.2-11.2-15.4	9.6-12.2-17.0	10.2-13-18.6
	NC	<15	18	25	30	33	37	42

- **The above data is derived based on one meter long linear bar grille with damper in full open position**
- **Throw (meter) is measured for terminal velocities of 0.75, 0.5 & 0.25 m/sec.**
- **Face velocity is measured in m/sec.**
- **Static pressure (Ps) loss is in mm of H2O.**
- **NC based on a room attenuation of 10 dB.**

linear bar grill

LINEAR BAR GRILLES

PERFORMANCE DATA

0° Deflection/12mm blade spacing /Returns

Width (mm) Ak in m²	Volume / Velocity / Pressure Drop & Noise Level						
50	CFM M/Sec. -PS in mm H_2O NC	332 0.157 0.48 <15	418 0.197 0.75 18	501 0.236 1.08 26	586 0.276 1.47 32	667 0.315 1.91 36	751 0.354 2.42 42
100	CFM M/Sec. -PS in mm H_2O NC	418 0.197 0.52 15	501 0.236 0.72 20	586 0.276 0.97 27	667 0.315 1.27 32	751 0.354 17 35	833 0.393 1.98 40
150	CFM M/Sec. -PS in mm H_2O NC	501 0.236 0.52 17	585 0.276 0.69 22	667 0.315 0.89 28	751 0.354 1.15 32	833 0.393 1.40 34	1000 0.472 2.01 38
200	CFM M/Sec. -PS in mm H_2O NC	586 0.276 0.49 16	667 0.315 0.64 23	751 0.354 0.82 26	833 0.393 0.99 32	1000 0.472 1.42 35	1168 0.551 1.92 40
250	CFM M/Sec. -PS in mm H_2O NC	667 0.315 0.48 19	751 0.354 0.62 23	833 0.393 0.74 25	1000 0.472 1.07 31	1168 0.551 1.46 35	1332 0.629 1.9 40
300	CFM M/Sec. -PS in mm H_2O NC	751 0.354 0.6 20	833 0.393 0.64 25	1000 0.472 0.77 27	1168 0.551 1.14 31	1333 0.629 1.52 38	1500 0.708 2.0 44

linear bar grill

LINEAR BAR GRILLES

PERFORMANCE DATA

15° Deflection/12mm blade spacing /SUPPLY

Width (mm) Ak in m²	Face Velocity	2.0	2.5	3.0	3.5	4.0	4.5	5.0
50	M³/Sec.	0.08	0.1	0.12	0.15	0.17	0.19	0.2
	CFM	170	213	255	297	339	381	423
	PS in mm H_2O	0.15	0.20	0.21	0.26	0.32	0.40	0.5
0.040	Throw (Mt.)	2.7-4.1-5.5	3.5-4.4-6.1	4.1-5.0-7.1	4.5-5.5-7.7	4.8-5.8-8.2	5.1-6.2-8.9	5.2-6.4-9.3
	NC	<15	<15	<15	17	22	25	31
100	M³/Sec.	0.14	0.164	0.196	0.228	0.26	0.293	0.326
	CFM	276	346	413	483	550	620	689
	PS in mm H_2O	0.15	0.20	0.22	0.3	0.39	0.5	0.6
0.066	Throw (Mt.)	3.5-4.6-7.1	4.1-5.3-7.8	4.7-5.9-8.4	5.3-6.2-9.0	5.8-7.1-9.7	6.1-7.7-10.8	6.4-8.2-11.7
	NC	<15	<15	15	18	23	27	32
150	M³/Sec.	0.177	0.22	0.263	0.309	0.353	0.397	0.44
	CFM	373	466	558	653	746	838	932
	PS in mm H_2O	0.15	0.19	0.26	0.37	0.46	0.58	0.7
0.088	Throw (Mt.)	4.2-5.7-8.3	4.7-6.2-9.1	5.4-6.8-10	6.0-7.6-10.6	6.7-8.5-11.5	7.1-8.9-12.5	7.4-9-313.2
	NC	<15	<15	16	19	24	29	34
200	M³/Sec.	0.223	0.278	0.334	0.390	0.443	0.499	0.556
	CFM	471	589	706	825	940	1059	1175
	PS in mm H_2O	0.19	0.21	0.33	0.38	0.52	0.66	0.10
0.111	Throw (Mt.)	4.7-6.3-9.1	5.3-6.9-10.0	6.1-7.8-11.3	6.9-8.3-11.9	7.7-9.2-12.8	8.9.9-13.8	8.5-10.4-14.9
	NC	<15	16	17	22	26	32	36
250	M³/Sec.	0.269	0.336	0.403	0.470	0.537	0.604	0.68
	CFM	568	710	851	994	1135	1277	1420
	PS in mm H_2O	0.2	0.26	0.34	0.43	0.57	0.78	0.94
0.134	Throw (Mt.)	5.1-6.8-11	5.6-7.8-11	6.6-8.3-11.8	7.6-9.3-12.8	8.4-10-14	8.5-10.5-15.1	9.1-12.3-16.4
	NC	<15	16	21	27	31	35	40
300	M³/Sec.	0.324	0.405	0.487	0.567	0.648	0.729	0.81
	CFM	686	857	1029	1200	1372	1543	1715
	PS in mm H_2O	0.2	0.3	0.36	0.48	0.64	0.84	1.01
0.162	Throw (Mt.)	5.3-7.5-10.8	6.2-8.4-11.8	7.2-9.4-12	8.2-10.2-13.9	8.9-10.9-15	9.2-11.6-16.2	9.6-12.317.6
	NC	<15	18	25	29	33	37	42

- The above data is derived based on one meter long linear bar grille with damper in full open position
- Throw (meter) is measured for terminal velocities of 0.75, 0.5 & 0.25 m/sec.
- Face velocity is measured in m/sec.
- Static pressure (Ps) loss is in mm of H_2O.
- NC based on a room attenuation of 10 dB.

linear bar grill

LINEAR BAR GRILLES

PERFORMANCE DATA

15° Deflection/12mm blade spacing /Returns

Width (mm) Ak in m²	Volume / Velocity / Pressure Drop & Noise Level						
50	CFM M/Sec. -PS in mm H_2O NC	332 0.157 0.46 <15	418 0.197 0.73 <18	501 0.236 1.04 25	586 0.276 1.43 31	667 0.315 1.89 32	751 0.354 2.33 41
100	CFM M/Sec. -PS in mm H_2O NC	418 0.197 0.49 <15	501 0.236 0.69 20	586 0.276 0.94 25	667 0.315 1.20 31	751 0.354 1.56 35	833 0.393 1.88 38
150	CFM M/Sec. -PS in mm H_2O NC	501 0.236 0.49 16	585 0.276 0.67 20	667 0.315 0.86 27	751 0.354 1.11 32	833 0.393 1.34 32	1000 0.472 1.92 37
200	CFM M/Sec. -PS in mm H_2O NC	586 0.276 0.46 17	667 0.315 0.64 23	751 0.354 0.79 26	833 0.393 0.99 30	1000 0.472 1.37 34	1168 0.551 1.86 39
250	CFM M/Sec. -PS in mm H2O NC	667 0.315 0.45 19	751 0.354 0.59 23	833 0.393 0.71 24	1000 0.472 1.02 30	1168 0.551 1.37 34	1332 0.629 1.79 38
300	CFM M/Sec. -PS in mm H_2O NC	751 0.354 0.49 20	833 0.393 0.6 23	1000 0.472 0.74 25	1168 0.551 1.06 30	1333 0.629 1.45 37	1500 0.708 1.8 42

- The above data is derived based on one meter long linear bar grille without damper.
- Static pressure (Ps) loss is in mm of H_2O.
- NC based on a room attenuation of 10 dB.

linear bar grill

BAR DEFLECTION

Standard

Model	0° one way	15° one way
RLBR	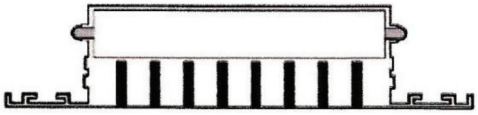	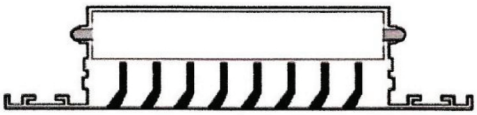
SLBR	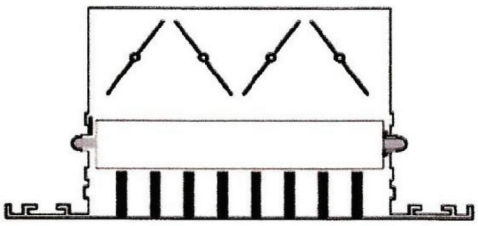	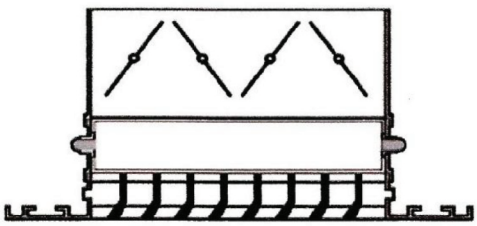
RLB		
SLB	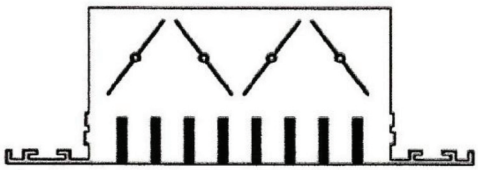	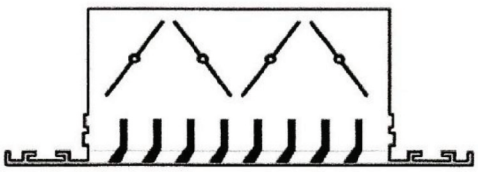

Optional

a) - 15° one way	b) - 15° two way	c) - 15° two way
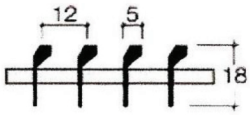	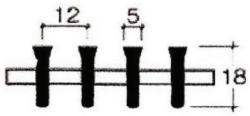	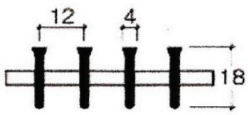

linear bar grill

INSTALLATION & ORDERING

Fixing Details

With Plenum

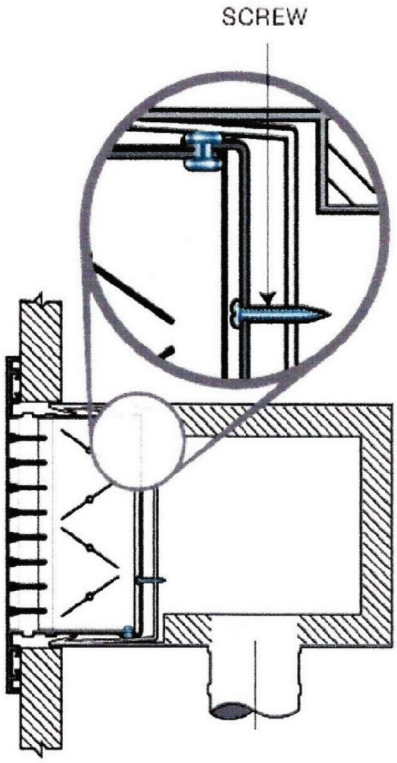

Without Plenum

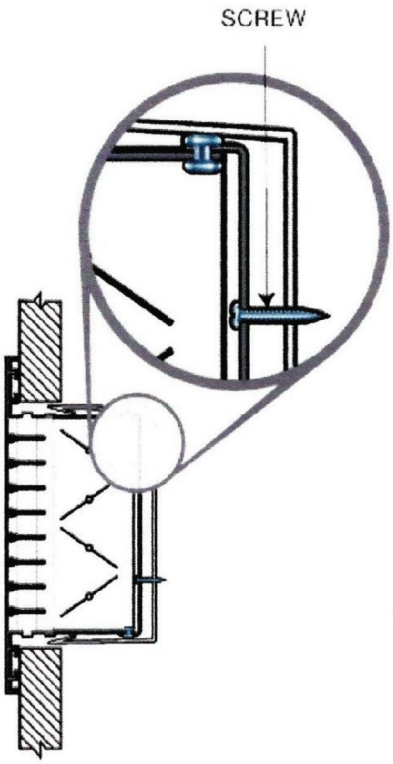

How to order:

Size	Quantity	Deflection	Finish
Neck Size Height x Length (in mm)	Specify in numbers	0^0 15^0 - 1 way 15^0 - 2 way	S = Silver Matt B = Ral 9016 C = Other RAL color

PERFORMANCE
for Metal Production
مصنع واحة الإنجاز للصناعات المعدنية

LINEAR BAR GRILL

@Performance

QATIF - AUJAM INDUSTRIAL
AREA DHAHRAN - JUBAIL HI WAY
P.O. BOX 10848 - QATIF 31911

القطيف – صناعية الأوجام – طريق الظهران الجبيل السريع
ص.ب ١٠٨٤٨ – القطيف ٣١٩١١ ـ المملكة العربية السعودية